DATA SHEET

Three Phase Induction Motor - Squirrel Cage

Customer	:

Product line	: Rolled Steel NEMA Premium Efficiency Three-Phase	Product code :	12502647
		Catalog # :	HT015404NPW01

Frame	: 254/6T	Locked rotor time	: 34s (cold) 19s (hot)
Output	: 15 HP (11 kW)	Temperature rise	: 80 K
Poles	: 4	Duty cycle	: Cont.(S1)
Frequency	: 60 Hz	Ambient temperature	: -20°C to +40°C
Rated voltage	: 230/460 V	Altitude	: 1000 m.a.s.l.
Rated current	: 36.4/18.2 A	Protection degree	: IP55
L. R. Amperes	: 237/118 A	Cooling method	: IC411 - TEFC
LRC	: 6.5x(Code G)	Mounting	: F-1
No load current	: 17.3/8.65 A	Rotation¹	: Both (CW and CCW)
Rated speed	: 1770 rpm	Noise level²	: 68.0 dB(A)
Slip	: 1.67 %	Starting method	: Direct On Line
Rated torque	: 6.15 kgfm	Approx. weight³	: 95.7 kg
Locked rotor torque	: 250 %		
Breakdown torque	: 300 %		
Insulation class	: F		
Service factor	: 1.15		
Moment of inertia (J)	: 0.0904 kgm²		
Design	: B		

Output	25%	50%	75%	100%
Efficiency (%)	90.8	91.0	92.4	92.4
Power Factor	0.39	0.64	0.76	0.82

Foundation loads	
Max. traction	: 257 kgf
Max. compression	: 353 kgf

		Drive end	Non drive end
Bearing type	:	6309 Z C3	6208 Z C3
Sealing	:	V'Ring	V'Ring
Lubrication interval	:	20000 h	20000 h
Lubricant amount	:	13 g	8 g
Lubricant type	:	Mobil Polyrex EM	

Notes
USABLE @208V 40.2A SF 1.00 SFA 40.2A

This revision replaces and cancel the previous one, which must be eliminated.
(1) Looking the motor from the shaft end.
(2) Measured at 1m and with tolerance of +3dB(A).
(3) Approximate weight subject to changes after manufacturing process.
(4) At 100% of full load.

These are average values based on tests with sinusoidal power supply, subject to the tolerances stipulated in NEMA MG-1.

Rev.	Changes Summary	Performed	Checked	Date

Performed by				
Checked by			Page	Revision
Date	13/11/2020		1 / 1	

This document is exclusive property of WEG S/A. Reprinting is not allowed without written authorization of WEG S/A.
Subject to change without notice

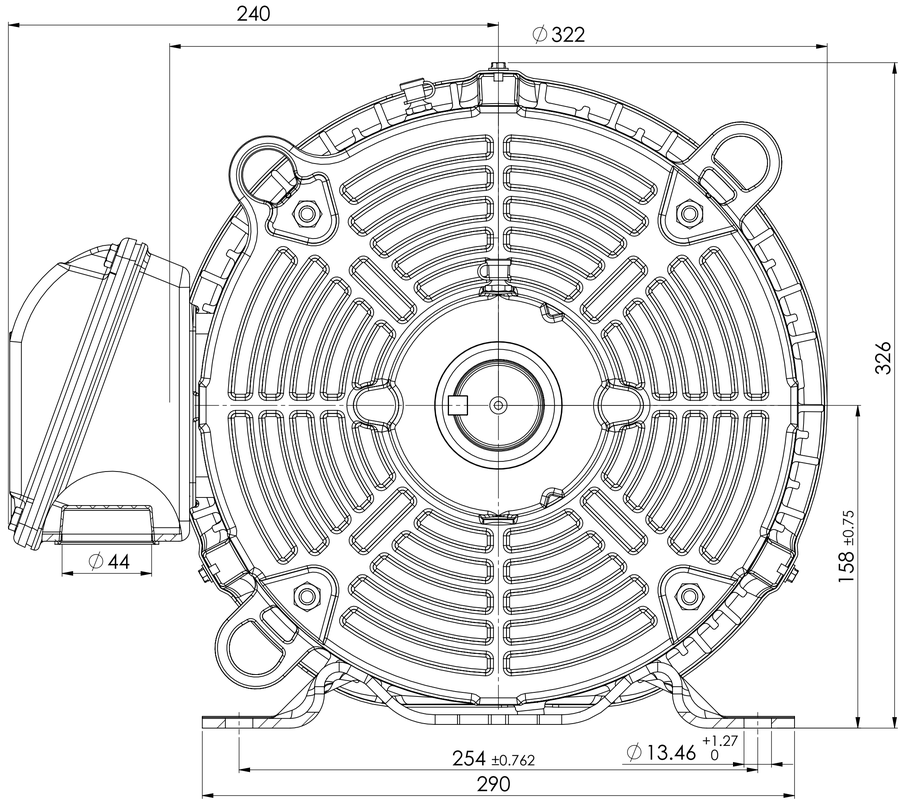

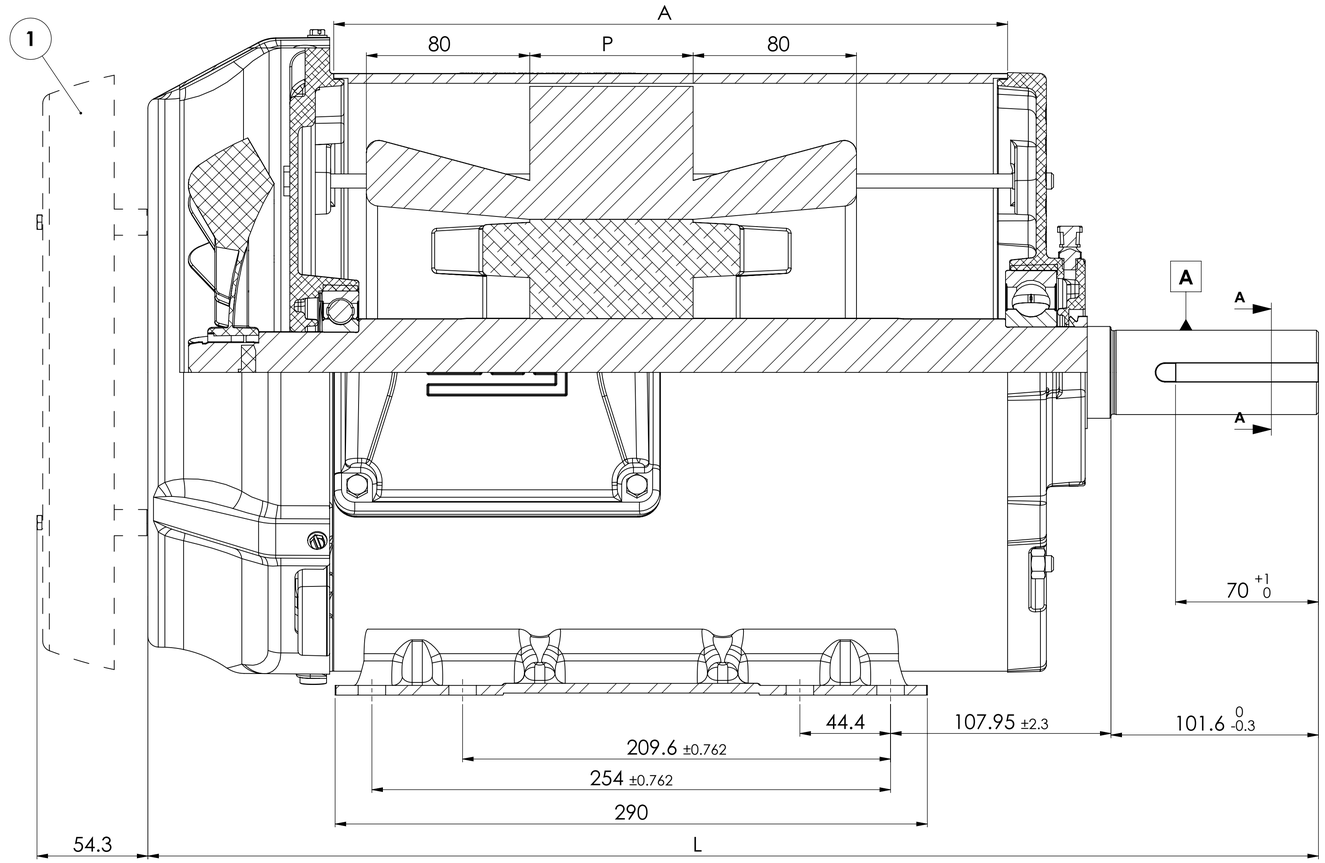

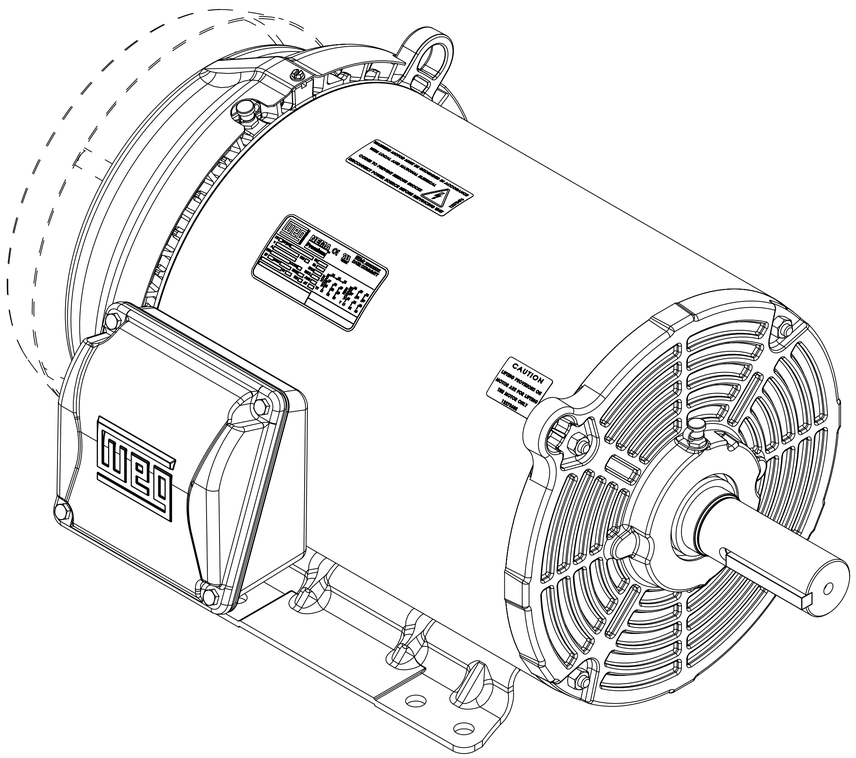

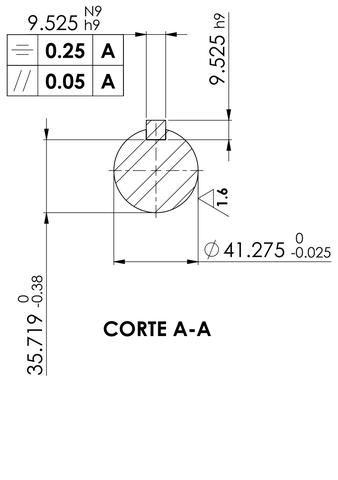

CORTE A-A

Pos. Drenos	Horizontal		Vertical (eixo para baixo)		Vertical (eixo para cima)	
	Traseira	Dianteira	Traseira	Dianteira	Traseira	Dianteira
N56 143/5T	Tampa	Carcaça	Tampa	Carcaça (*)	Tampa	Carcaça
182/4T	Tampa	Tampa (**)	Tampa	Tampa (**)	Tampa	Tampa (**)
213/5T	Carcaça (***)	Carcaça	Carcaça (***)	Tampa (**)	Tampa	Carcaça
254/6T	Tampa	Carcaça	Tampa	Tampa (**)	Tampa	Carcaça

*** Motor com flange, o dreno vai na tampa flangeada.**
**** Tampa normal ou flangeada.**
***** Motores com tampa flangeada e com carcaças menores que 290mm, o dreno vai na tampa traseira.**

Cotas / Carcaça	330	350
A	330	350
P	80-140	150-170
L	573	593

1. SOMENTE QUANDO INDICADO NA LISTA TÉCNICA DO MOTOR

Cabeça de Bobina	F1	F2
II	80	80
IV - VI	65	65

MASSA BRUTA/GROSS WEIGHT		MASSA LÍQUIDA/NET WEIGHT			ESCALA/SCALE	1:5
500001081712		REVISAO NORMA CABEÇA BOBINA	JROPELATO		JHONATANP	02.09.2015	05
500000886238		ALT. CONF. CLAIM 413416105	PMAUERBERG		ALISSON	16.05.2014	04
ECM	LOC	RESUMO DE MODIFICAÇÕES / SUMMARY OF MODIFICATIONS	EXECUTADO / EXECUTED	VERIFICADO / CHECKED	LIBERADO / RELEASED	DATA / DATE	VER
EXEC	RAFAELLOPES	DIMENSIONAL 254 TEFC TPA NORMAL			10002037738		
VERIF/CHECKED					000	05	
LIBER/RELEASED	JTOGNERI						
DT LIBER/REL DT	24.04.2013	WMO JARAGUÁ DO SUL DESENVOLVIMENTO DE PRODUTO			FOL/SHEET	1 / 1

LIBERADO

COPIA SEM CONTROLE

SWD - A1

Propriedade da WEG. Proibida reprodução sem autorização prévia./ WEG's property. Forbidden reproduction without previous authorization.